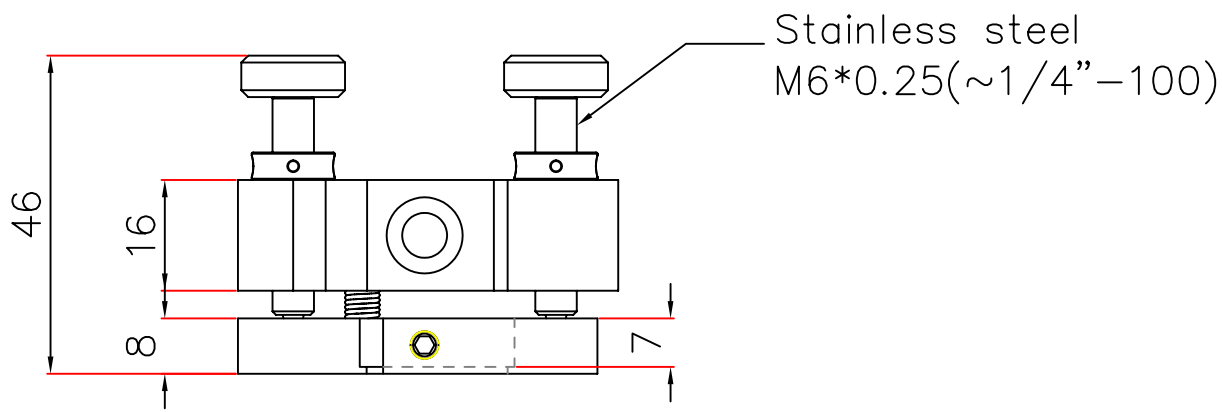
Stainless steel
M6*0.25(~1/4”–100)
46
16
8
7

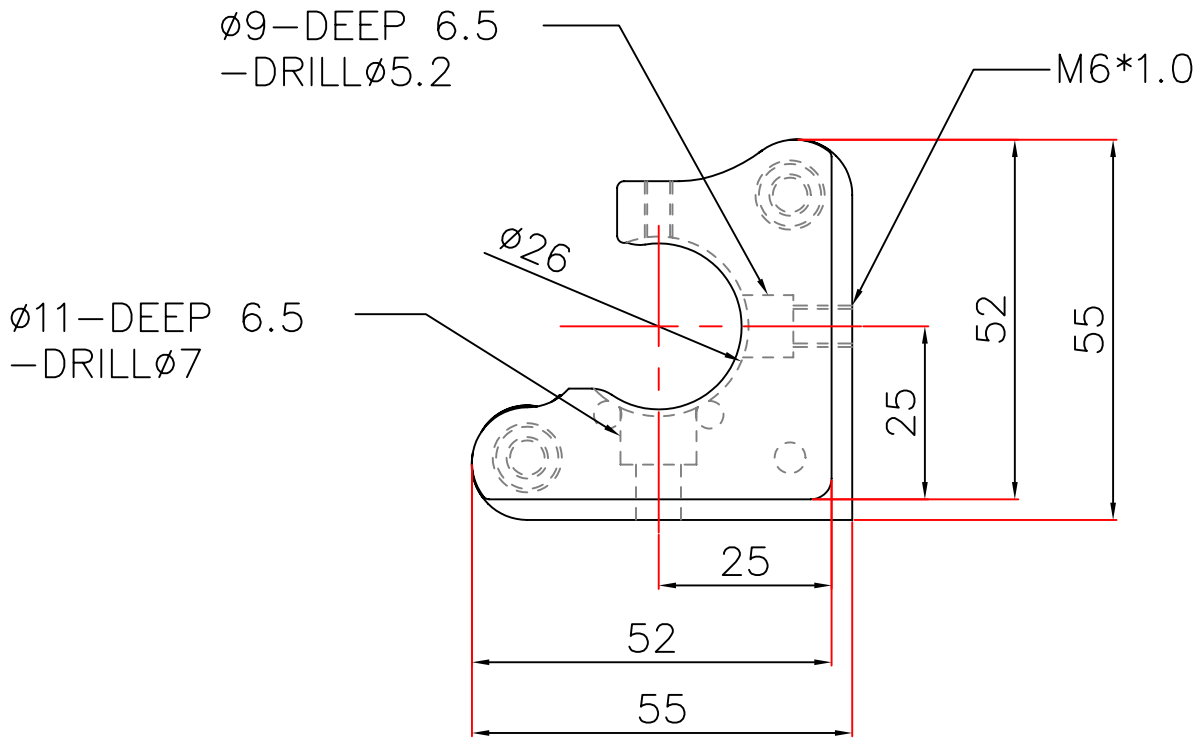
ø9–DEEP 6.5
–DRILLø5.2
M6*1.0
ø26
ø11–DEEP 6.5
–DRILLø7
52
55
25
25
52
55